CHITKARA UNIVERSITY

MODERN & COMPUTATIONAL PHYSICS LAB MANUAL

2023-2024

Institute/School Name	Department of Applied Sciences, CUIET		
Program Name	BE(Computer Science & Engineering)		
Course Code	22AS015		
Course Name	Modern & Computational Physics		
Labs (per week)	**01**	**Course Credits**	**1**
Course Coordinator Name	Dr. Nidhi Bansal Garg		

1. Any pre-requisites for the course:

- Students should been equipped with knowledge of vernier caliper, screw gauge , least count measurement and ohm's law.

2. Scope and objective of the course:

- The objective of the laboratory is learning. The experiments are designed to illustrate phenomenaindifferentareasofPhysicsandtoexposeyoutomeasuringinstruments.Conduct the experiments with interest and an attitude of learning.
- This calculus-based coursec overs topics in the area of electricity ,magnetism and optics.
- Topics include electric fields, electric potential, conductivity, capacitance, magnetic fields, inductance , AC and DC circuits , EM waves , geometric optics and physicaloptics.

Reference Books

RB1: Lab Manuals prepared by faculty of Physics.

RB2: Practical physicsby Squires, Cambridge University press.

Other readings and relevant websites

S.No.	**Link of websites for some experiments.**
1.	http://www.datacottage.com/nch/fibre.htm
2.	http://www.phy.davidson.edu/stuhome/cabell_f/diffractionfinal/pages/Michelson.htm

List of Experiments

	Experiment detail
1	To study the variation of dielectric constant with temperature of a substance by using dielectric constant kit.
2	To find out the susceptibility of Given sample by Quinke's Method.
3	To determine the ionization potential of mercury using a gas filled diode.
4	To determine the wavelength of light using Michelson's Interferometer.
5	To study the angular divergence laser beam.
6	To determine the wavelength of the laser light by diffraction grating method.
7	Determine the numerical aperture and acceptance angle of a short-range optical fiber.
8	Study the variation of magnetic field with distance along axis of a circular coil carrying current.
9	To determine Planck's constant by using light emitting diodes.
10	To study the Hall effect in a semiconductor

Evaluation Scheme:

Component 1	Internal Viva–Voce	10
Component 2	End Term	20
	Total	30

*Lab Performance will be evaluated periodically.

*The End Term examination for practical courses is held at the end of semester and includes conduct of experiment and an oral examination (viva voce). The mandatory requirement of 75% attendance in all lab classes is to be met for being eligible to appear in this component

This document is approved by:

Designation	Name	Signature
Course Coordinator	Dr. Nidhi Bansal Garg	
Lab Incharge	Prof. D.P.Gupta	
Department Dean	Dr. Mohit Kumar Kakkar	

PREPARATIONOFPRACTICALFILE

After the verification of complete experiment in the physics laboratory class, every student has to write each experiment in the physics laboratory practical notebook. The following format is recommended and should be adhered to closely unless your instructor instructs otherwise.

1. Each notebook should be clearly identified with a title 'Modern & Computational Physics Laboratory Final Notebook', the name of the student (whom it belongs to) & his/her enrolment number, name of the branch, semester and the academic year (e.g. 2023-2024) etc.
2. The first page of the Practical notebook should contain an index having five columns for serial number, name of the experiment, date of performing the experiment, date of submission, grades and remarks.
3. Every experiment should start from a fresh page. In the top-right of the first page of each experiment, the date of performing the experiment should be indicated. For writing the experiment details, only use the ruled pages. Blank pages should be used for drawing the figures, observation table and calculations.
4. The experiment should be recorded in the following sequence:
   a) **Objective/Aim of the experiment**
   b) **Apparatus Required**
   c) **Formula Used & Brief Theory**
   d) **Description of Apparatus**
   e) **Observations**
      - Prepare the detailed observation table as explained in the Physics Laboratory manual.
      - There should be no overwriting.

- Every observation should be followed by a proper unit.

f) Calculations

- Perform the calculation as explained in the Physics Laboratory manual.

g) Result and Discussion

- Compare your result with the standard values(if available) and also calculate the percentage error in your results.

h) Precautions

- Mention the most appropriate precautions which should be taken care while performing the experiment.

EXPERIMENT 1.

OBJECTIVE:

To study the variation of dielectric constant with temperature of a substance by using dielectric constant kit.

APPARATUSREQUIRED:

Dielectric constant kit, sample holder, oven, and Barium titanate ($BaTiO_3$) sample.

Figure-1

THEORY

Dielectric or electrical insulating materials are understood as the materials in which electrostatic fields can persist for a long time. These materials offer a very high resistance to the passage of electric current under the action of the applied direct-current voltage and therefore sharply differ in their basic electrical properties from conductive materials. Layers of such substances are commonly inserted into capacitors to improve their performance, and the term dielectric refers specifically to this application. The use of a dielectric in a capacitor presents several advantages.

The simplest of these is that the conducting plates can be placed very close to one another without risk of contact. Also, if subjected to a very high electric field, any substance will ionize and become a conductor. Dielectrics are more resistant to ionization than air, so a capacitor containing a dielectric can be subjected to a higher voltage. Also, dielectrics increase the capacitance of the capacitor. An electric field polarizes the molecules of the dielectric (Figure-2), producing concentrations of charge on its surfaces that create an electric field opposed (antiparallel) to that of the capacitor. Thus, a given amount of charge produces a weaker field between the plates than it would without the dielectric, which reduces the electric potential. Considered in reverse, this argument means that, with a dielectric, a given electric potential causes the capacitor to accumulate

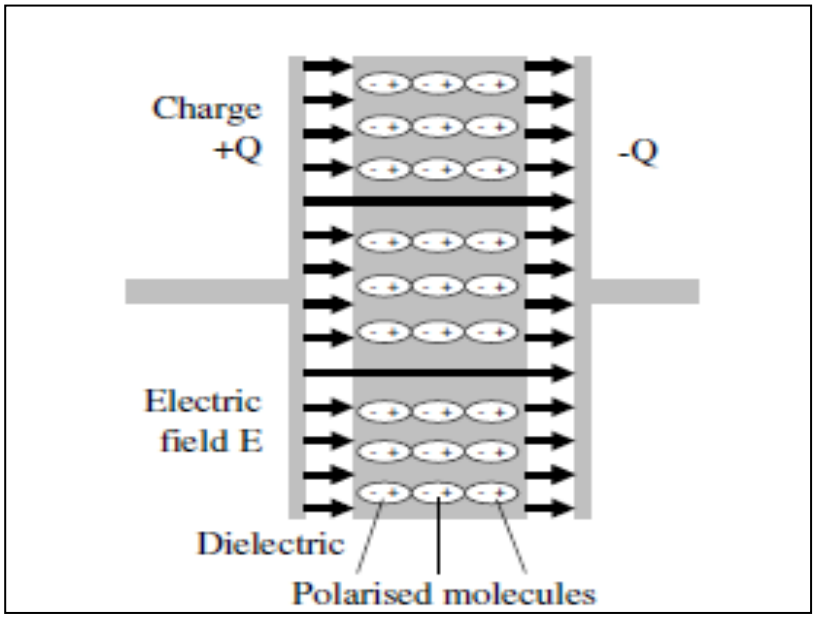

alargercharge.

Figure-2

The electrons in the molecules shift toward the positively charged left plate. The molecules then create a leftward electric field that partially annuls the field created by the plates. (The air gap is shown for clarity; in a real capacitor, the dielectric is in direct contact with the plates.)

Dielectric Constant: The dielectric constant (ε) of a dielectric material can be defined as the ratio of the capacitance using that material as the dielectric in a capacitor to the capacitance using a vacuum as the dielectric. Typical values of ε for dielectrics are:

Material	DIELECTRIC CONSTANT (ε)
Vacuum	1.000
Dry Air	1.0059
Barium Titanate	100-1250
Glass	3.8-14.5
Quartz	5
Mica	4-9
Water distilled	34-78
Soil dry	2.4-2.9
Titanium dioxide	100

\

BRIEF DESCRIPTION OF THE APPARATUS

1. Probe Arrangement

It has two spring loaded probes. These probe move in pipes and are insulated by teflon bush, which ensure a good electrical insulation. The probe arrangement is mounted in suitable stand, which also hold the sample plate and RTD sensor. The RTD is mounted in the sample plates such that it is just below the sample, separated by a very thin sheet of mica. This ensures the correct measurement of sample temperature. This stand also serves as a lid of the oven. The leads are provided for the connection to RTD and capacitance meter.

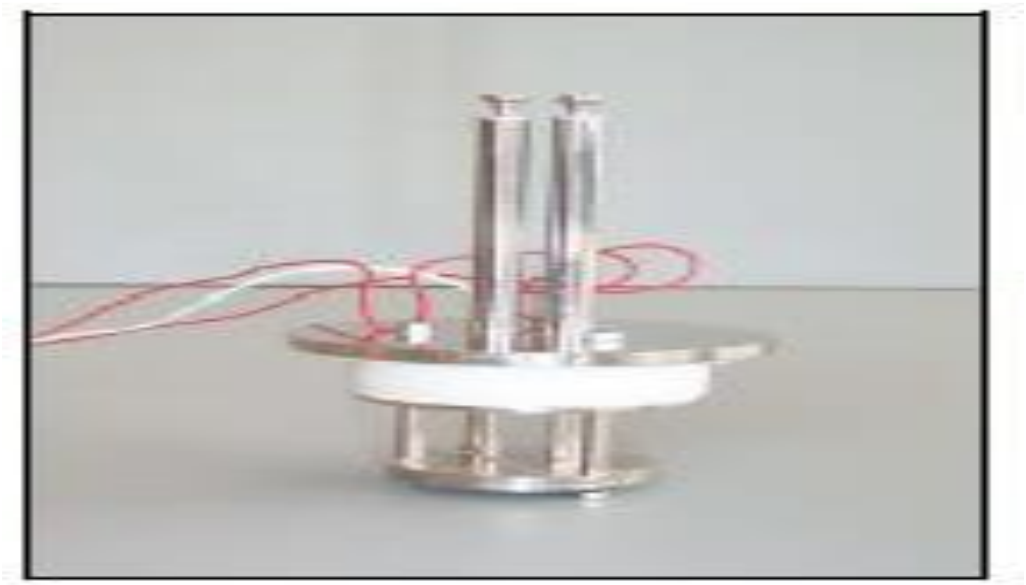

Probe Arrangement

2. Sample

Barium Titanate ($BaTiO_3$) plate with top and bottom conducting surface.

3. Oven

This is a high quality temperature controlled oven. The oven has been designed for fast heating and cooling rates, which enhance the effectiveness of the controller.

PROCEDURE

1. Put a small piece of aluminium foil on the base plate. Pull the spring loaded probes upward, insert the aluminium foil and let them rest on it. Put the sample ($BaTiO_3$) on the foil. Again pull the top of one of the probe and insert the sample below it and let it rest on it gently. Now one of the probes would be in contact with the lower surface through aluminium foil.
2. Connect the probe leads to the capacitance meter.
3. Connect the oven to main unit and put the oven on OFF position.
4. Switch on the main unit and note the value of capacitance. It should be a stablereading and is obtained directly in pf.

5. (i) Switch ON the temperature controller and approx adjust the set-temperature. The green LED would light up indicating the oven is ON and temperature would start rising. The temperature of oven in $^{\circ}$C would be indicated by DPM.

   (ii) The controller of oven would switch ON/OFF power corresponding to set temperature. In case it is less than desired, the set temperature may be increased or vice-versa.
   (iii)Because of thermal inertia of oven, there would be some over shoot and under shoot before a steady set-temperature is attained and may take 10 minutes for each reading.

(iv) To save time, it is recommended to under adjust the temperature. Example, it is desired to set at 50°C, adjust the temperature set knob so that LED is OFF at 45°C. The temperature would continue to rise. When it reaches 50°C adjust the temperature set knob so that oven is just ON/OFF. It may go up 1 and 2°C, but would settle down to 50°C. Since the change in temperature at this stage is very slow and response of RTD and sample is fast, the reading can also be taken corresponding to any temperature without waiting for a steady state.

OBSERVATIONS AND CALCULATIONS

Sample: Barium titanate ($BaTiO_3$)
Area (A): 8 x 6 mm^2
Thickness (t): 1.42 mm
Permittivity of space (ε_0): 8.85 x 10^{-12} F/m or 8.85 x 10^{-3}pf/mm

Now, $\varepsilon = \frac{C}{C_0}$;

where $C_0 = \frac{A\varepsilon_0}{l}$ = 29.9 x 10^{-3} pf

S.No.	Temperature ($^{\circ}$C)	Capacitance, C (pf)	Dielectric constant, ε

RESULT: Write the variation of dielectric constant with temperature.

PRECAUTIONS

1. The spring loaded probe should be allowed to rest on the sample very gently; otherwise it may damage the conducting surface of the sample or even break the sample.
2. The reading of capacitance meter should be taken when the oven is OFF. This would be indicated by the green LED. In ON position there may be some pickups
3. The reading near the Curie temperature should be taken at closer intervals say $1^{\circ}C$.

ORAL QUESTIONS

1. What do you mean by dielectric constant?
2. What do you mean by insulating materials?
3. What is the difference between dielectrics and insulating materials?
4. What is the value of dielectric constant for air?

DeterminethesusceptibilityofFeCl_3samplebyusingQuinke's method.

APPARATUSREQUIRED:

Anelectromagnet capable of producing field ofthe orderof 10^4oersted, power supply unit, FeCl_3,U-tube,water,funnel100cccylinder,weightingbottle,weightbox,gaussmeter.

DIAGRAM:

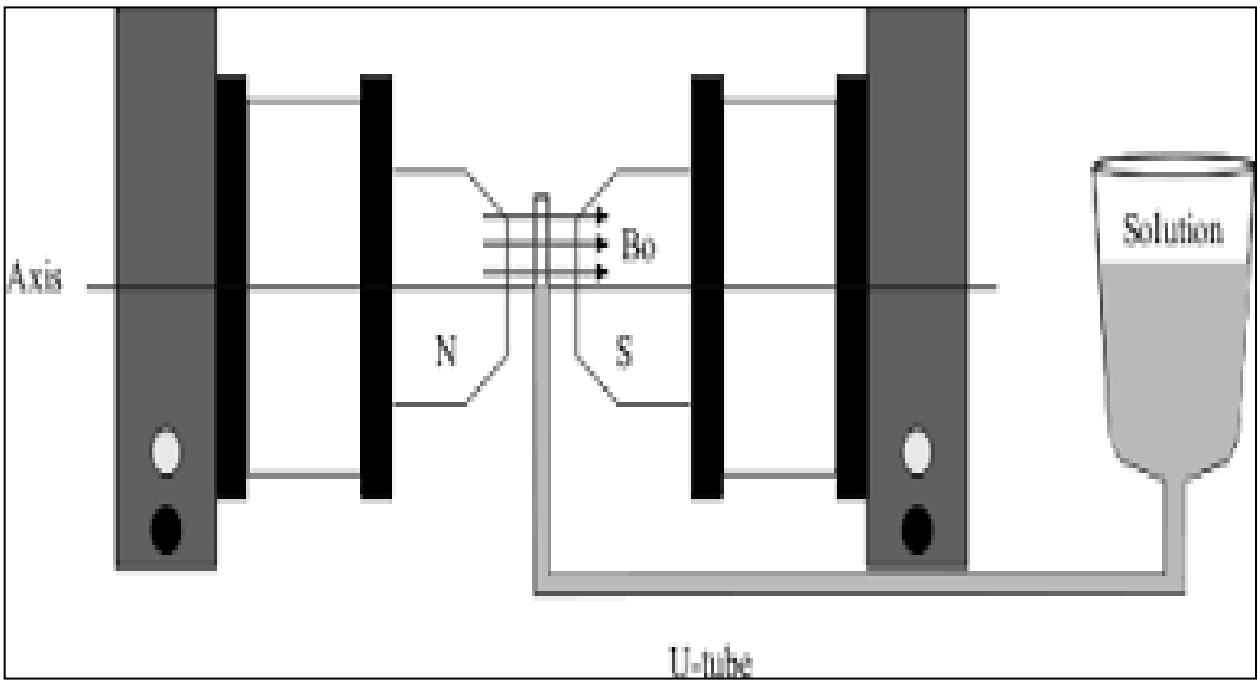

PRINCIPLEANDTHEORY:

If a paramagnetic salt solution (like manganese chloride) or ferromagnetic salt (like ferric chloride) is put in a tube and placed between the poles of a magnet then there is a rise in the liquid level. If the rise in liquid level is measured accurately, then this will give informationabout the susceptibility of the solution.

It was established by Faraday in 1845 that magnetism is universal property of every substance. In magnetic materials, sources of magnetization are the electrons orbital angular motion around the nucleus, and the electrons' intrinsic magnetic moment. The other sources of magnetism are the nuclear magnetic moments of the nuclei in the material which are typically thousands of times smaller than the electrons' magnetic moments, so they are negligible in the context of the magnetization of materials. The magnetism of materials is mainly an outcome of the interactions of magnetic moments of their constituent atoms or molecule. The magnetic materials are generally classified into three categories (1) diamagnetic (2) paramagnetic (3) ferromagnetic. The magnetic materials, for which susceptibility is negative, are diamagnetic, whereas, the materials with small positive value are called paramagnetic and the materials with high value of susceptibility are known as ferromagnetic. Weber, tried to explain magnetic properties on the basis of molecular currents. The molecular current gives rise to the intrinsic magnetic moment to the molecule, and such substances are attracted in a magnetic field, and called paramagnetic. The repulsion of diamagnetic is assigned to the induced molecular current and its respective reverse magnetic moment. The force acting on a substance, either of repulsion or attraction, can be measured with the help of an accurate balance in case of solids or with the measurement of rise in level in narrow capillary in case of liquids. The force depends on the susceptibility K, of the material, i.e., on ratio of intensity of magnetization to magnetizing field (I/H). Evidently it refers to that quantity of substance by virtue of which bodies get magnetized.

Quantitatively: it refers to the extent of induced magnetization in unit field. If the forceon the substance and field are measured, the value of susceptibility (K) can be calculated.

The value of the susceptibility *K* of liquid aqueous solution of a paramagnetic substance in air is given by a well known expression:

$$K = \frac{2(\rho - \sigma)\, gh}{H^2} \qquad \text{.... (1)}$$

where ρ is the density of the solution, σ is the density of air, g is the acceleration due to gravity, h is the height through which column rises on raising the field, $H$is the magnetic field at the centre of the pole pieces. But the density of air (1.22 kg/m^3) is very small as compared to density of water (1000 kg/m^3), so density of air can be neglected. Hence equation (1) becomes

$$K = \frac{2\rho\, gh}{H^2} \qquad \text{....(2)}$$

Thenthemasssusceptibility ofsolutionisgiven by

$$\chi_s = \frac{K}{\rho} = \frac{2\, gh}{H^2}$$

PROCEDURE:

1. Notethevariation ofmagneticfieldwithcurrentby usingtheGaussmeter.
2. Fill a U-tube which is thoroughly cleaned with a solution of $FeCl_3$in water containing 25 gm of a hydrated salt ($FeCl_3.6H_2O$) per cc for the solution.
3. NowinsertthenarrowlimbofU-tubeverticallybetweenthe polepiecesoftheelectromagnet andadjustthefunnellimbsothatwhenthemagnetisenergizedthemeniscusisinthecentral regionoftheuniformmagneticfield.Alsonotethecorrespondingcurrentintheammeter.
4. Switch off the current and again note the reading of the meniscus and take a reading.Note the fall in height h of the meniscus for a particular current. Repeat the experiment for different values of magnetizing current.

OBSERVATIONS:

Sr. No.	Current (I) (A)	Magnetic field (H) (gauss)	Magnetic field$(H)^2$ (gauss)	Initial positionof the meniscus (cm)	Final position of the meniscus (cm)	Fallin height (cm)
1.	1 amp					
2.	2 amp					
3.	3 amp					
4.	4 amp					

Plotthegraphbetweenfallinheight(h)versusH^2andbyusingitsslopevaluefindthemass susceptibility.

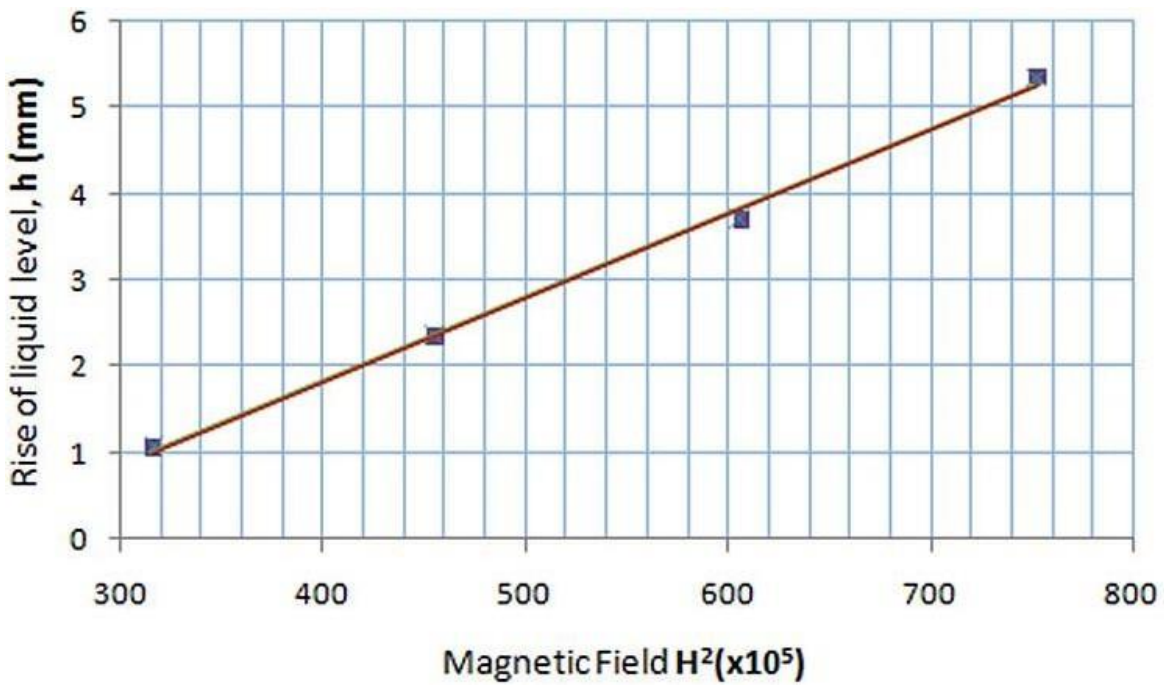

RESULT:

Meanmasssusceptibility ofthesolution isgiven by..... $cm^2s^{-2}g^{-2}$.

PRECAUTIONS:

1. Checkthejointsbetweenrubbersandglasstubesothatthereis noleakage of solution.
2. Solutionshouldbeprepared carefullysothat saltisdissolved uniformly.
3. Themagneticfield shouldremainuniform duringthe experiment.

SOURCESOF ERROR:

1. Duetoevaporationofwatertheresultsobtainedareslightlylessthantheactualvalues.
2. Duetonon-uniformityofthenarrowlimbbore,errorduetosurfacetensionmayoccur.
3. Since the bore is very narrow, so there may be deformation of the liquid in the tube dueto application of magnetic field and so the rise or fall of the liquid meniscus may be read wrongly.

ORAL QUESTIONS:

1. Whatdoyou meanbymagneticmaterials?
2. Whatareparamagnetic andferromagnetic materials?
3. Definemagneticfluxdensity andmagneticfieldstrength.
4. Definepermeabilityand relativepermeability.
5. Whatistherelationbetweenrelativepermeabilityandmagnetic susceptibility?
6. Whatdoyou meanby retentivityand coercivity?
7. Whyisferromagnetism foundinsolidsonlyand notin fluids?
8. Whatismagnetic moment?
9. Whatismagnetic susceptibility?
10. WhatisQuinke's method?

EXPERIMENT2

OBJECTIVE:

Determinethe valueofspecificcharge{e/m}of anelectron byThomsonMethod.

APPARTUS REQUIRED:

Cathode Ray Tube (CRT) is mounted on a wooden stand, power supply fitted with voltmeter to measure the deflecting voltage, Bar Magnets (Permanent) one pair. Compass box oneset. Wooden standhaving two arms, fittedwith scalesto measurethe distanceofthepolesof the magnets.

FORMULA USED:

Thespecific chargefor anelectroncanbecalculatedusingfollowing relation;

$$\text{Specificcharge}\{e/m\} = \frac{V\lambda}{ILH^2d} \times 10^7 \text{e. m .u/gm} \qquad \ldots(1)$$

where$H=H_e\tan\theta$(here$H_e$isthehorizontalcomponentsofearthmagneticfieldofthe place where experiment is performed, usually we take its value = 0.345G.)

Thevarious parameters are:-

I=Lengthof Horizontalpairofplate.

L=Distanceofthescreenfromtheedgesoftheplates. V =

Voltage applied to the plates.

λ=Totaldeflectionofthespotonthescreen. H =

Intensity of the applied field. d=Separation

between the plates.

THEORY: Cathode RayTube(CRT)consists ofthreebasiccomponents:

1. Electron Gun: FF is a filament which when heated emits electron. (control grid) carries a negative charge, so sends out a beam of electrons which are accelerated by the anodes.

2. DeflectingSystem:Thissystemdeflectsthebeamofelectronseitherelectricallyormagnetically.

3. FluorescentScreen:whenbeamimpinges onitspotis produced.

Diagram:

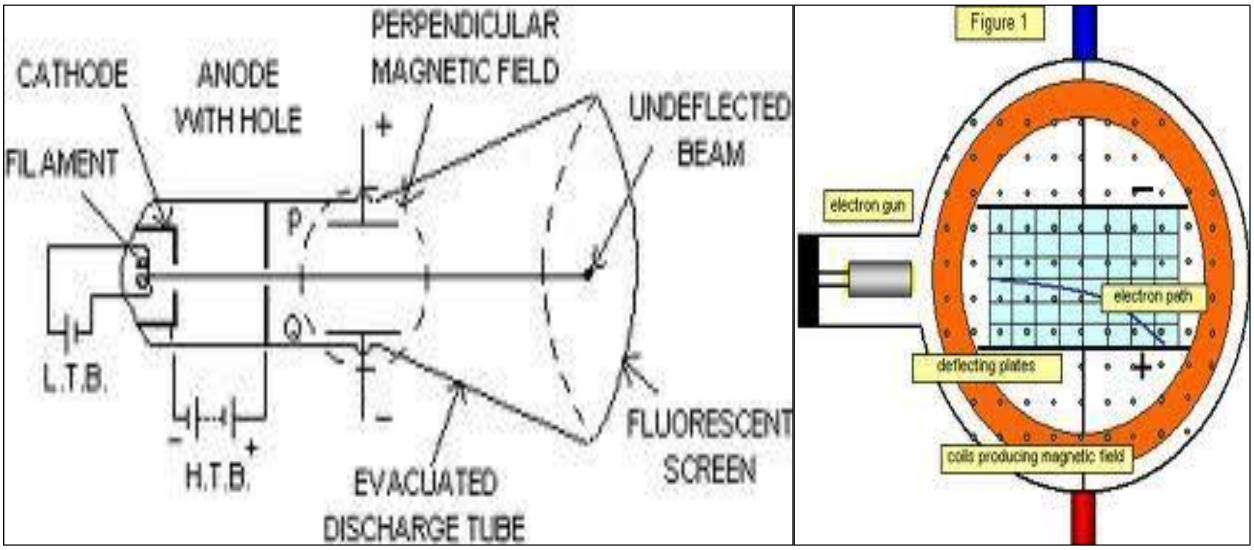

Figure:Layout ofa CRT.

Thevalueofe/misindependentthenatureofgasandmaterialofthecathodeofthedischarge tubewhichindicate thatelectronsarefundamentalofallmaterials.Presentaccepted valueofe/m $1.7x10^7$e.m.u./gm.

PROCEDURE:

1. Mount Cathode Ray tube (CRT) in armed wooden stand such that the CRT faces towards north &south direction while arms of this stand towards east &west direction (set the direction with the help of compass box).

2. ConnecttheCRTPlugto thepower supplysocket mounted onthe frontpanel.

3. Switchon theinstrument usingON/OFFtoggleswitch providedon the front panel.

4. Set the deflection voltage to zero volt & x shift control potentiometer to middle position. Adjust the intensity & focus of the spot (clear as small as a point) on screen of CRT through the deflection selector switch towards forward position.

5. Read theinitial reading ofspot on thescale attached to thescreen oftheCRT, say it is 0.2 cm. Now give a deflection to the spot in the upward direction by applying deflecting voltage suchthat the final reading is +0.8 cm. So, the total deflection on the screen of the spot is (0.2 + 0.8) = 1.0cm. Notedown thisapplied voltage(V) &deflection ofthe spot(λ) inobservation table.

6. Nowplacebarmagnetsonbothsidesofthewoodenstandarmssuchthattheiroppositepolesface eachotherandtheircommonaxisisperpendiculartotheaxisofCRT.Themagnetsshouldbekeptin suchamannerthatthesemaybemodetoslidealongthescales.

7. Adjust distance and polarity of the magnets so that the spot traces back to its initial position (which was 0.2 cm).

8. RemoveCRTstandand placeamagnet metercompass box mountedinastandin centerofthe armed wooden stand. Adjust the pointer of the compass box to read 0-0 without disturbing the direction of armed wooden stand.

9. Note down the deflection angle (θ) through compass box & note down it in the observation table and calculate the value of magnetic field *H*.

10. Calculatethevalueofe/musingequation(1).

11. Repeatsteps 5to 10for othervalues ofspot deflections.

12. Calculatemeanvalueofe/m fordifferent setof readings.

NOTE: For better accuracy apply deflection voltage only up to 20 volts constant of the cathode ray tubes:-

DESCRIPTIONOFCRT 83SJ5:

a) Separationbetweentheplates (d)=1 cm

b) Lengthof horizontalpairofplate (I)= 3cm

c) Distanceof thescreenfrom theedges oftheplates(L)=8.5cm

d) Horizontalcomponentofearth'smagneticfield(B_H)=0.345G

OBSERVATIONS:

S. No.	Voltage Applied (V)	SpotDeflection (λ) (cm)	CompassBox Deflection(θ) (Degree)	Magnetic Field Applied(H)	SpecificCharge {e/m}
1.	2v				
2.	4v				
3.	6v				
4.	8v				

RESULT:

Meanvalue ofspecificcharge{e/m} =..... emu/gm.

Standardresult :e/m = 1.76 x10^7e.m.u./gm

=1.76x 10^{11}Coulomb/kg

PRECAUTIONS:

1. Themovement ofbar magnetsshould be slowto detectthe minor deflections.
2. ReadingontheCRT shouldbecarefully checked.
3. HandletheCRT withproper care.

ORAL QUESTIONS: 1.Whatis CRO?

2.Whythe screenofCRT glow?

EXPERIMENT-3

OBJECTIVE:

Tofindtheionizationpotentialof mercuryusingagasfilled diode.

APPARATUSREQUIRED:

A gas filled (mercury vapour) diode, a D.C. power supply, a voltmeter, a millimeter, connecting wires etc.

THEORY:

The term**ionization energy**(**E_I**) of anatomormoleculemeans the energy needed to remove electrons from an atom. Large atoms require low ionization energy while small atoms require high ionization energy. This quantity was formerly called **ionization potential**, and was at one stage measured in volts. The name "ionization energy" is now strongly preferred. In atomic physics the ionization energy is measured using the unit "electron volt" (eV).

Ionization potential of mercury: the ionization potential of mercury can be determined by introducing mercury vapor at a low pressure of 10mm to 50mm of mercury column in an evacuated tube fitted with a cathode and an anode. A mercury vapor filled gas diode is the most suitable for the purpose. The cathode of the gas diode may be directly or indirectly heated types. A hot cathode gas filled diode is known as phantom (or thyratron).A gas filled diode is symbolically represented as shown in fig 1. The dot in the tube shows the presence of the gas or vapour.

When the anode or plate of the gas filled diode is at a positive potential with respect to the cathode, electrons move across the tube from the cathode to the anode. This electronic current depends upon two factors:

(1) Thenumberof electronsemittedperunit areafromthecathodeandits temperature.

(2) Theeffectofspacechargeregion,*i.e.*,thenegativelychargedregioncontainingthe electron cloud due to the accumulation of electrons emitted by the cathode.

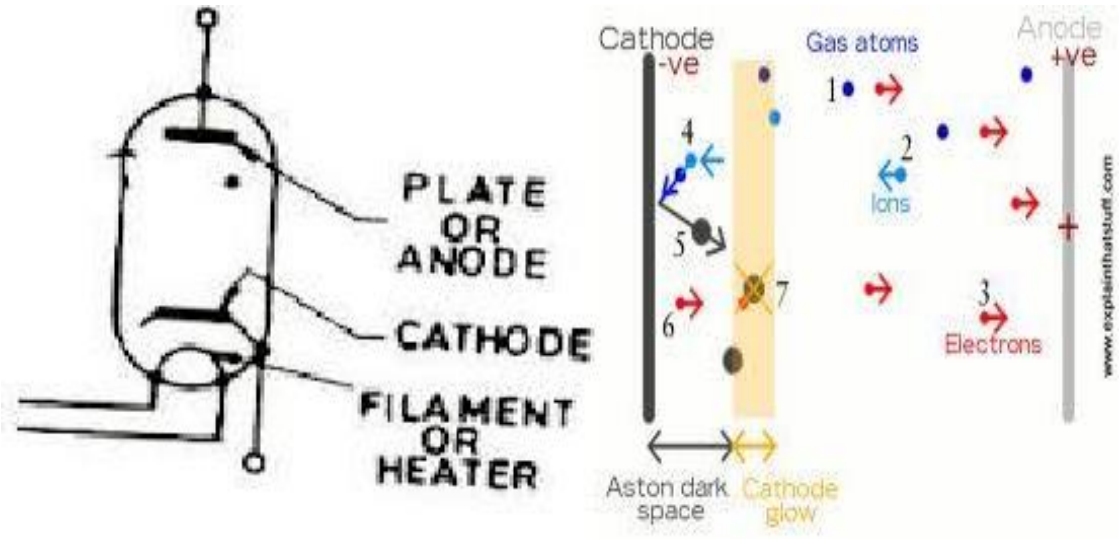

Fig1Mercury filled gasdiode.

Astheplatepotential is increased theplatecurrent slowly increases. But when theplate potential is increased beyond a particular value the plate current increases much more rapidly than it does below that critical value. This is because when the plate potential approaches this critical value the electrons arriving at the anode gain enough energy to knock out the electrons from the atom ofthegasclosetotheanodetheseelectronsarealsoattractedbytheanodecausingan increasein plate current and the positive ions neutralize some of the space charge, which further helps to increase the kinetic energy of the thermal electrons. This potential is equal to the ionization potential of the gas and for this value of plate potential there is a marked increase in platecurrent.

If a graph is plotted between plate potential and plate current; the plate current at first increases slowly for a given increase in plate voltage and when the plate potential is equal to or greater than the ionization potential there is a greater increase in plate current for the small increase in plate potential. The change in slope is, however, not very abrupt but there is a short-curved portion within which the change in plate current goes on becoming more and more rapid.

To find the value of ionization potential the two straight portions AB and CD of the graph are produced to meet at a point E. If we draw a perpendicular EF on the X-axis, then OF represents the ionization potential as shown in figure 3.

PROCEDURE:

1. Draw the diagram showing the scheme of connections as in fig. 2 and make the connections accordingly.

2. Switch on the power supply and apply a suitable potential to the filament FF of the gas diode. The filament is heated in a short time to become red hot.

3. Adjust the voltmeter reading to 1 volt and note the corresponding value of the current in the millimeter. Increase the plate potential by 1 volt and note the voltmeter reading as well as the millimeter reading. Proceed till the plate potential is about 15volts.

4. Taking the plate voltage along the x-axis and plate current along the y-axis plot a graph between plate current and plate voltage as shown in fig 3. Draw the straight line AB between the first few points and the straight line CD between the last few points and produce AB and DC to meet at E. Draw EF perpendicular to the X-axis, then OF gives the value of the ionization potential of mercury.

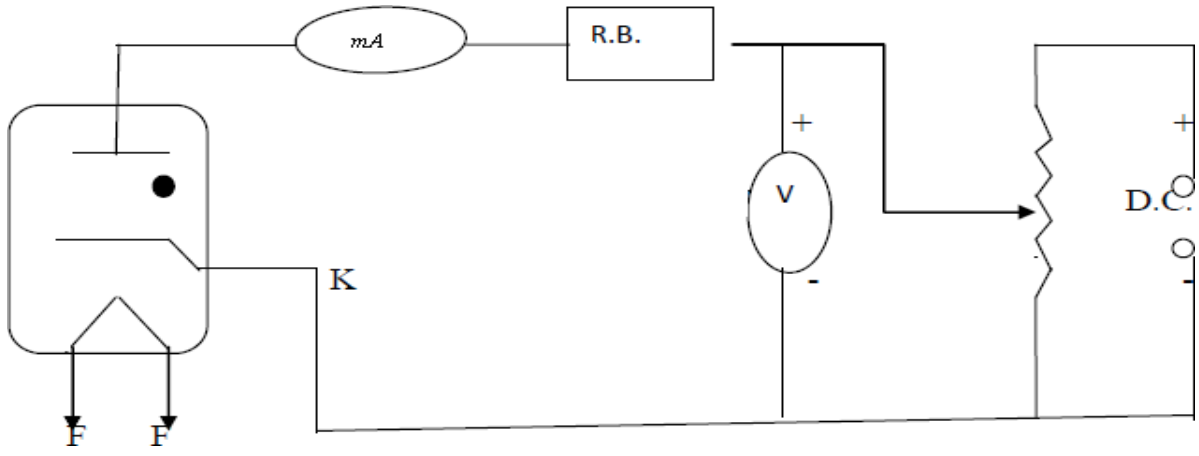

Fig.2: Circuit diagram showingtheschemeof connections.

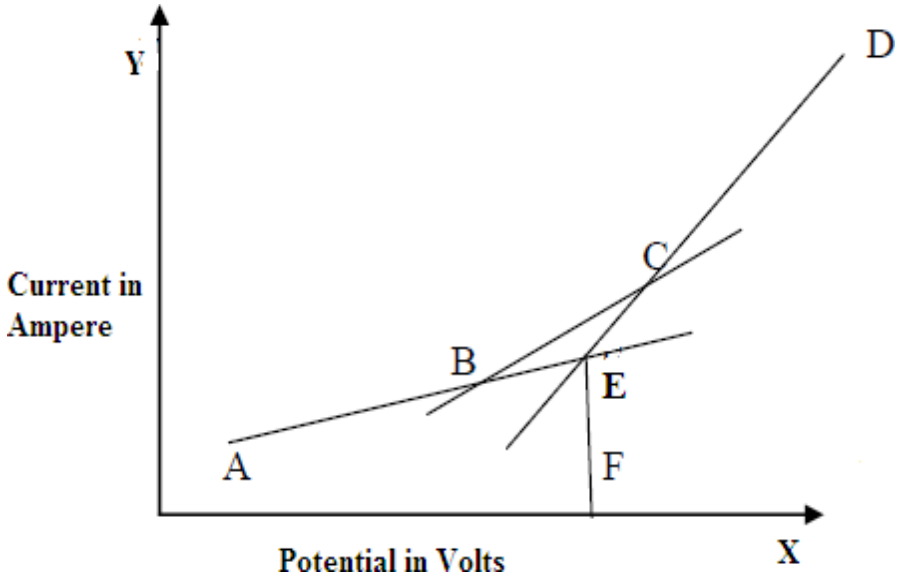

Fig3: Variationoffilamentcurrentwithappliedvoltage.

OBSERVATIONS:

Sr.No	**Platevoltageinvolts (v)**	**Platecurrentin (A)**
1. 2. 3. 4. 5. 6. 7. 8.		

RESULT:

Ionizationpotentialofmercuryfromthegraph(observedvalue)=..... volts

Standardvalueofionizationpotential=10.43 V

Percentageerror= $\frac{Standard\ resut - calculated\ result}{Standard\ result}$ ×100=……%

PRECAUTIONS:

1. Agas filledmercury vapordiodemust beused.
2. The positive of the voltmeter as also that of the millimeter must be connected to the positive of the D.C. supply.
3. Theplatepotential shouldnot exceed18volts.
4. To find the exact position of ionization potential two straight lines joining the first few points and the last few points should be produced to meet. A smooth curve joining all the points should not be drawn.
5. For accurate measurement of voltage, a V.T.V.M. may be used in place of an ordinary voltmeter.

ORAL QUESTIONS:

1. Whatistheatomic numberofmercury?

2. Whatisionizationpotential?

3. Howdoes gas filled diodeworks?

4. Whatis thevalueofionization potentialfor mercury?

EXPERIMENT4.

OBJECTIVE:

Determinethewavelengthoflaserlight withthehelpofMichelsonInterferometer.

APPARATUSREQUIRED:

MichelsonInterferometer,Lasersourceetc.

THEORY:

The Michelson interferometer uses light interference to measure distances in units of the wavelength of light from a particular source. It was developed by Albert Michelson in 1893 to measurethestandardmeterinunitsof thewavelengthofthered lineinthe cadmiumspectrum. It is also known for its use in demonstrating the non-existence of electromagnetic wave-carrying "ether".Contemporary uses of Michelson Interferometer include precision mechanical measurements and Fourier transform spectroscopy. In laboratory, we use a Michelson interferometer to (a) measure the wavelength of light from a light source, (b) measure the index of refraction of air.The basic idea is to split a beam of light into two beams; delay one with respect to the other, and then recombine them to observe their interference. Light from a monochromatic source is directed at a "half-silvered" glass plate,*i.e.* a mirror with a very thin metallic coating. Approximately half the light intensity is reflected to Mirror 1 (M1) and half transmitted, so it strikes Mirror 2 (M2). Thelight reflected by these mirrors goes back to the half-silvered plate and half the intensity of each beam then goes to an observation device either telescope or naked eye. The two light sources emit light over an angular range.An observation point at an angle θ with respect to the sources will be at constructive interference if

$$n\lambda=2d\sin\theta$$

Wheren =0orapositiveinteger,andλisthewavelengthofthelight,and $d$isthedistance moved by themirror.

The resulting image on the observation device will be a series of concentric, circular bright and dark rings. As mirror 1 is moved, the fringes will change from bright to dark etc.

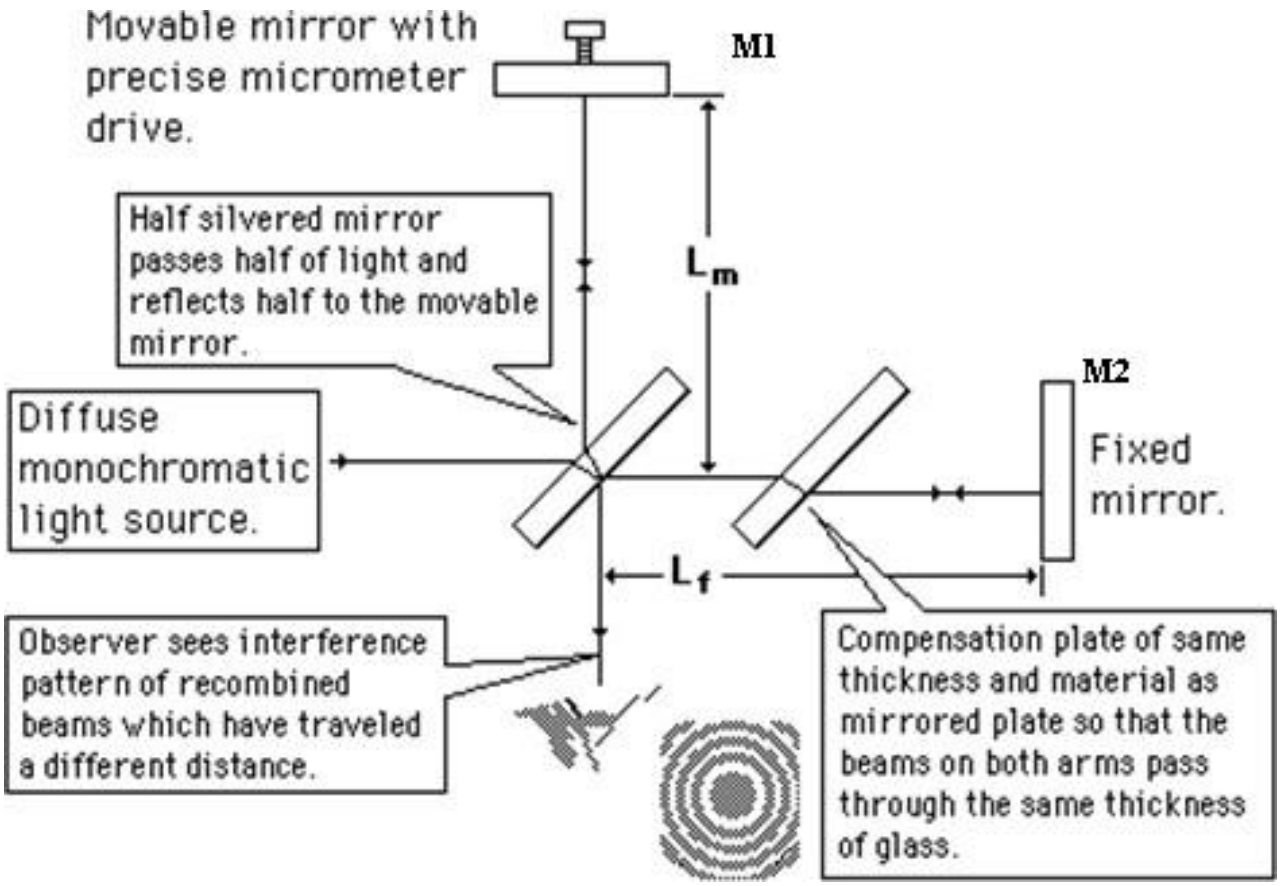

FORMULA USED:

Thewavelength oflight isgiven by

$$\lambda=2(X_2-X_1)/ N$$

Where X1 is the initial position of mirror M1 of Michelson Interferometer, $X_2$is the final position of mirror M1 of Michelson interferometer after N number of fringes appeared / disappeared at the centre. N is the number of fringes appeared or disappeared at the centre when the mirror M1 moves by a distance $d = X_2 – X_1$.

PROCEDURE:

1) Calculatetheleastcount ofthemicrometerscrew attachedtomirrorM1.
2) Turn on the lamp and look through the observation device. If you see the ring pattern (alternate dark and bright) and if it can be changed by turning the micrometer screw then the apparatus is aligned or set.
3) If it is not the case then first of all try to make mirrors M1 and M2 perfectlyperpendicular to each other by adjusting the screws behind the mirrors.For this purpose a screen with a pin hole is placed between the half-silvered plate and source. When observed from the observation device four images of the pin hole are seen, two of them arefaintandtwoareintense.AdjustthescrewsbehindM1andM2insuchawaythatwe observeonlytwointenseimagesofthepinhole.ThishappensonlywhenthemirrorsM1 and M2 are perfectly perpendicular to each other. Remove the pinhole screen.
4) Nowmove themirrorM1 such that youobserve abrightspot at thecentre.
5) Turn the micrometer either clockwise or anti-clockwise for about 1 rotation.Then turn it in the same direction enough to see N fringes appear or disappear at the centre. N should be at least 10.
6) Notethe initial andthe final position.
7) Lettheinitialreadingbe X_1.
8) Letthefinalreadingbe X_2.
9) MeasurethedistancetraveledbymirrorM1whenNnumberoffringesappear/disappear at the centre using initial (X_1) and final (X_2) readings of the micrometer screw.Find the value of distance move by mirror M1 i.e. $d = X_2 – X_1$.

OBSERVATIONS:

Least count = _____mm

S. No.	No. of fringes moved=N	Scalereading (mm)	Distance moved=d(mm)	Wavelength=2d/N (Å)
1.				
2.				
3.				
4.				
5.				

CALCULATIONS:

1) Calculatethewavelengthusingtheformula λ=2d/N.
2) Calculatethemeanvalueofwavelengths (λ)obtainedfromvarious observations.
3) Standardvalueofλ forlaseruser is6328 Å.
4) Calculatepercentageerror=(calculatedvalue–standardvalue/Standardvalue)×100 %

RESULT:

The wavelength of light obtained = _____Å

Standardvalue ofwavelength oflight =6328 Å

Percentageerror= $\frac{Standard\ resut - calculated\ result}{Standard\ result}$ ×100=……%

PRECAUTIONS:

1. MirrorM1andM2shouldbeperpendicularto each other.

2. Thefineadjustment knob should bemoved in one direction.

3. Glassplatesand mirrorsshouldnot betouchedor cleaned.

4. Thescrews behindmirrorM1should berotatedthroughaverysmall angle.

ORAL QUESTIONS:

1. Whatisinterferenceof lightand whatdoyoumeanby interferometer?

2. Aretwo mirrorssimply plane mirrors?

3. Whattypeofglassplatesare‘G’ and‘C’?

4. Whatisthe roleof compensatoryplate‘C’?

5. Howdo you get circular fringes?

6. Whatwill youobserve withwhitelight source?

7. Whatarelocalizedfringes?

8. When the mirror M1 is moved through a distance 2 λ distances, how many fringes appear ordisappear?

EXPERIMENT5

OBJECTIVE:

Studytheangulardivergenceoflaser beam.

APPARATUSREQUIRED:

Alasersource,opticalbench,screen.

FORMULAUSED:

$$\text{Angulardivergence}\theta = \frac{\left[D_2^2 - D_1^2\right]^{1/2}}{L} \times \frac{180}{\pi} \text{ degree}$$

where $D_1$and $D_2$are the diameters of spot at 1st and 2ndposition respectively. L is the distance between 1st and 2nd positions.

THEORY:

Ordinary light sources emit light in all directions because an ordinary light is non-directional in nature and intensity of this light decreases with increasing distance. Laser beam is directional in nature because of which the intensity of light is very large.

Laser beam is characterized by extremely low divergence. The light emitted by a laser isconfined to a rather narrow cone. But, when the beam propagates outward, it slowly diverges or fansout. Foranelectromagneticbeam,beamdivergenceistheangularmeasureoftheincreasein the radius or diameter with distance from the optical aperture as the beam emerges.

When a laser beam is allowed to fall on a screen then a circular bright spot is observedon the screen and if screen is moved towards the source then size of the spot decreases and if screen is movedawayfromthesourcethensizeofthespotincreases.Wecancalculatethedivergenceofa beamif the beam diameters at two separate positions (1, 2), and the distance (*L*) between these positions are known.

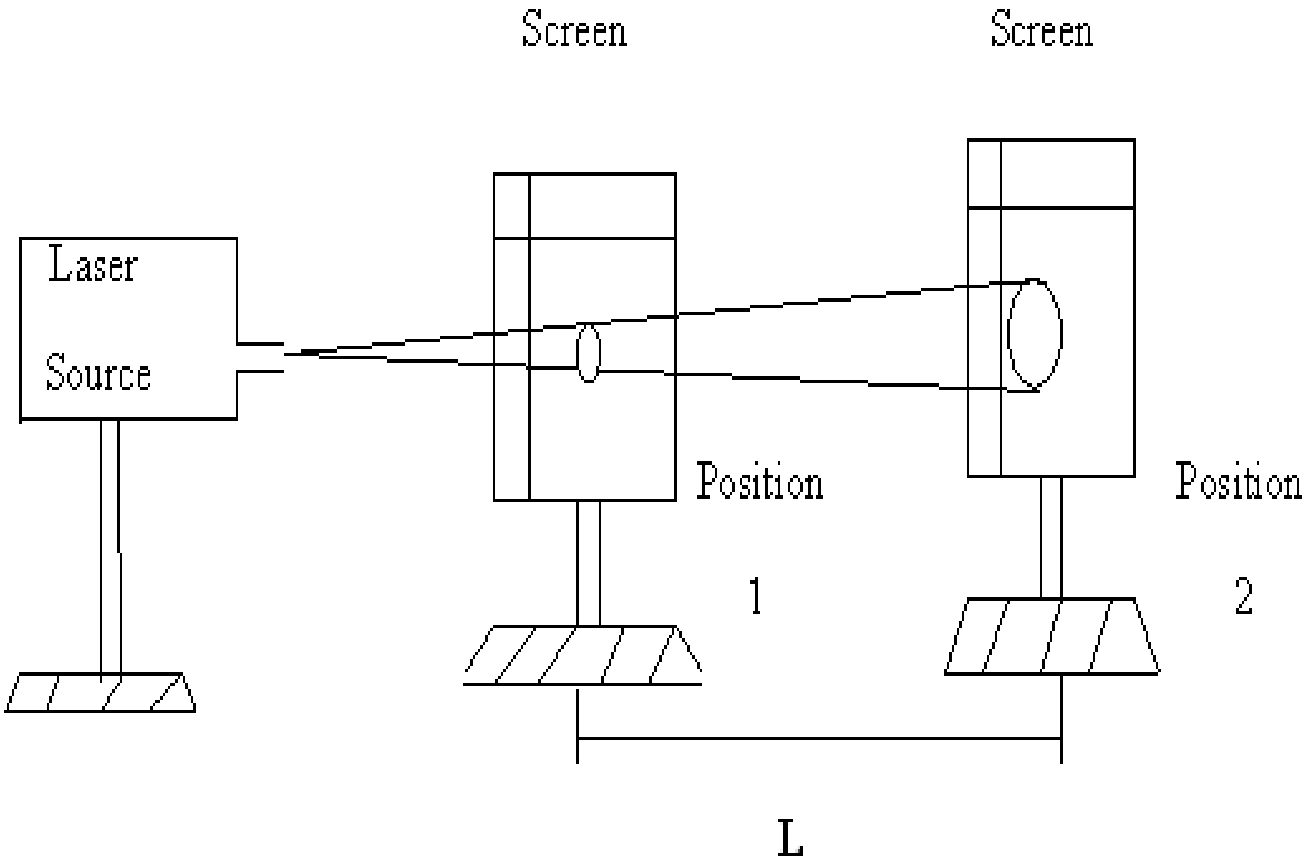

Fig.1

Fig.1 illustrate the arrangement of the experiment in which $D_1$is the diameter of the spot of laser beam at one position and $D_2$is the diameter at another position and the distance between these two positions is L.

PROCEDURE:

1. Placethelasersourceonanuprightofanoptical bench
2. Placethescreen onanotheruprightat someknowndistance.

3. Switch on the laser source. A laser beam coming from the source forms a circular bright spot (red color) on the screen
4. Measurethe sizeofthespot on thescreen. This isD_1.
5. Now movethescreenawayfromthe source bysomeknownvalue.Againmeasure the size of the spot, this is D_2.
6. Notedown thedistancebetween the two positions.
7. Repeat the experiment at least 3 times at different positions of the screen and record the observation table.
8. Usingabovedatacalculatetheangulardivergenceθ.

OBSERVATIONS:

S. No	Ist position of spot a(cm)	Diameter of 1st spot D_1(cm)	2nd position ofspot b (cm)	Diameterof 2ndspot D_2(cm)	L= b-a (cm)	$\theta=\frac{\left[D_2^2-D_1^2\right]^{1/2}}{L}\times\frac{180}{\pi}$ degrees
1.	….	….	….	….	….	….
2.	….	….	….	….	….	….
3.	….	….	….	….	….	….
						Meanθ=….

CALCULATIONS:

$$\theta=\frac{\left[D_2^2-D_1^2\right]^{1/2}}{L}\text{ radian}$$

$$=\ldots\times\frac{180}{\pi}\text{degree}\quad(\text{Take}\pi=3.14)$$

θ=..... degrees

RESULTS:

Theangulardivergence of laserbeamis……

Theangulardivergenceoflaser beam mayvary from 0.2to 0.5 degrees.

PRECAUTIONS:

1. Donot lookdirectly atlaser beambecauseitis hazardousto the eyes.
2. Thelasersourceisto be switchedoffaftertakingobservations.

ORAL QUESTIONS:

1. Whatdoyou meanbyangulardivergenceoflaserlight?
2. Whatarethecharacteristicsoflaser light?
3. Namethefactors onwhich byangulardivergence of laserlight depends.
4. Whatisdifferencebetweenordinarylightandlaserlight?

EXPERIMENT6

OBJECTIVE:

Todeterminethewavelengthofthelaserlightbydiffractiongrating method.

APPARATUSREQUIRED:

A laser source, diffraction grating (15000 lines/inch), screen with paper, power supply, optical bench.

THEORY:

When a beam of light is incident on a plane diffraction grating which constitutes a series of equidistant slits of equal width, the light is diffracted from each slit and these diffracted beams will then interfere with each other on different points on the screen.

Fornormalilluminationthegratingequationisgivenas

$$n\lambda=(d+b)\sin\theta$$

where

*n*is theorder ofthe maximaor imageformed.

$\lambda$is thewavelength ofthelight used

d+bis thedistancebetween twolines of thegrating i.e.grating element

θ is the angular position of the image measured from the normal to the grating or gratingelement.

PROCEDURE:

1. Switch on thelaser.

2. Put the diffraction grating on the stand of the optical bench at some distance from the laser source.

3. Apaperis fixedon thescreen andputthescreenatasuitabledistance.

4. The position of the grating is moved so that the laser beam gets diffracted to give the bright spots on the graph paper fixed on the screen.

5. The position of the diffraction spots are marked on the paper with the help of fine pencil.

6. The separations of bright spots of different orders of diffractions from the central maxima are measured and the observations are tabulated as Ys.

7. Thedistancebetweenthe diffractiongratingismeasuredasD.

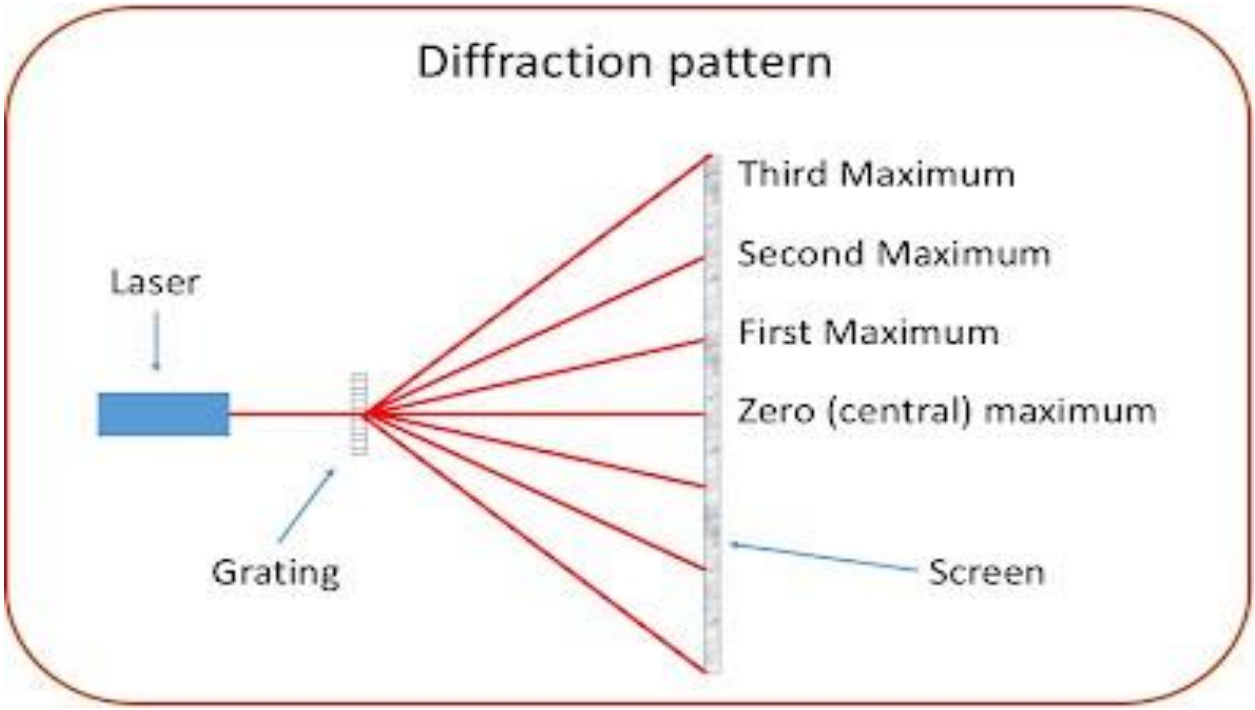

OBSERVATIONS: Asthediffractiongratingwith15000lines/inchisusedsothatthedistance between the two lines of the grating is

d+b= 2.54/15000 cm.

A) Forn=1

S.No.	D (cm)	Y_1		MeanY_1 (cm)	$\tan\theta_1 = Y_1/D$	$\theta_1 = \tan^{-1} Y_1/D$
		L.H.S. (cm)	R.H.S. (cm)			
1.						
2.						
3.						
4.						

B) Forn=2

S.No.	D (cm)	Y_2		MeanY_2 (cm)	$\tan\theta_2 = Y_2/D$	$\theta_2 = \tan^{-1} Y_2/D$
		L.H.S. (cm)	R.H.S. (cm)			
1.						
2.						
3.						
4.						

CALCULATIONS:

Distance between diffraction gating and the screen is D=_____cm.

'θ'theangleofimageiscalculatedas$\theta_1 = \tan^{-1} Y_1/Dand\theta_2 = \tan^{-1} Y_2/D$

Furtherbyknowing n,(d+b), θthe wavelength(λ)canbecalculatedby usingthe formula

$n\lambda_1=(d+b)\sin\theta_1$ and $n\lambda_2=$

$(d+b)\sin\theta_2$

Mean $\lambda=(\lambda_1+\lambda_2)/2$

RESULT:

1. Thecalculatedvalue ofthewavelengthofthe laseris=……nm
2. Thestandard valueof thewavelength ofthe laseris =580 nm

$$\%\text{error} = \frac{\text{Standard resut} - \text{calculated result}}{\text{Standard result}} \times 100$$

= _____%

PRECAUTIONS:

1. Lasershouldbeproperlyleveled.
2. Directexposureto laser mustbeavoided.
3. Thetracingof thediffractionpatterns shouldbe madeaccuratelyand withgreat care.
4. Distancebetweenthescreenand lasersource shouldbemeasuredaccurately.

ORAL QUESTIONS:

1. Laserstandsfor

(a) lightamplificationbyspontaneous emission

(b) lightamplitudebyspontaneousemission

(c) lightamplificationbystimulatedemissionof radiation

(d) lightoscillationbystimulatedemission

2. Laserusedduringexperimentalwork is

(a) semiconductorlaser

(b) rubylaser

(c) He-Nelaser

(d) CO_2laser

3. Explainthebasicconditionmust fordiffractiontotakeplace.

4. Diodelaseris a

(a) threelevel

(b) two level

(c) four level

(d) sixlevellaser

5. Whatdoyoumeanbyatomic excitation?

EXPERIMENT7

OBJECTIVE:

Determinethenumericalapertureandacceptanceangleofashort-rangeoptical fibre.

APPARATUSREQUIRED:

Anopticalfibrecable,lasersource,numericalaperturejig,whitescreenandconnecting wires.

THEORY:

Numericalapertureof anopticalfibreisdefined asthelight gatheringability ofthe fibre.

Numerical aperture also refers to the maximum angle at which the light incident on the fibre end is totally internally reflected and is properly transmitted along the fibre.

NumericalApertureis definedas the sineoftheacceptanceangle.

Theconeformedbytherotationofthisanglealongtheaxisofthefibreistheconeofthe acceptance of the fibre.

The light ray should strike the fibre end with in this cone of acceptance else it is refracted out of the fibre. Numerically, it is also defined

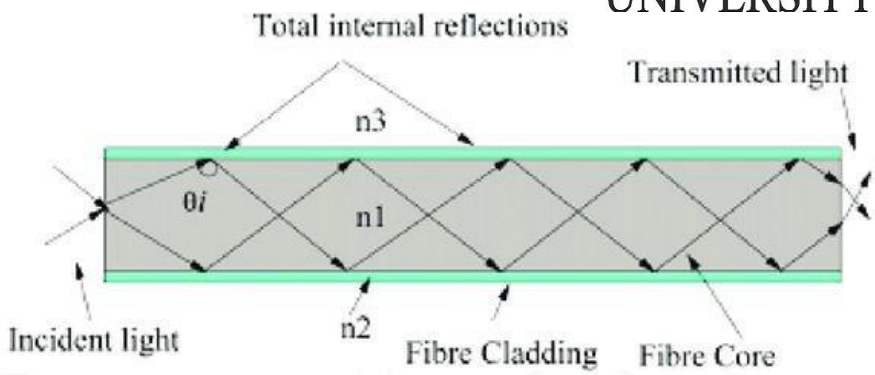

Figure 6.
Total internal reflection in an optical fiber.

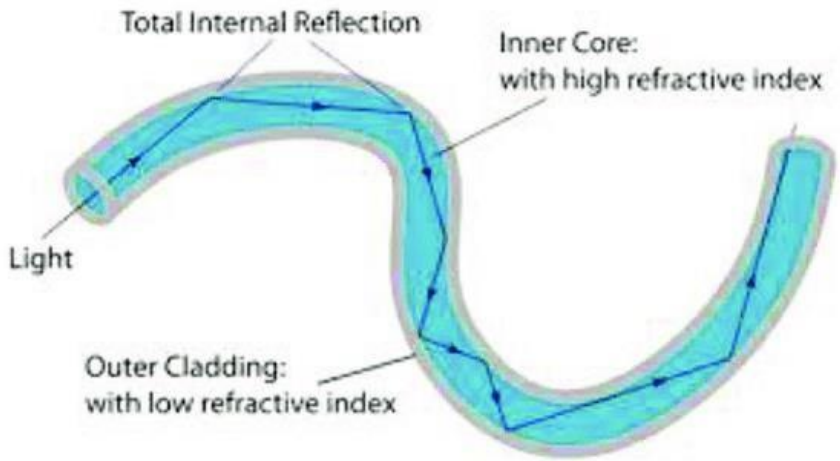

Fig.Numericalapertureinnerviewof opticalfibre cable

PROCEDURE:

1. Switchon thelaser light source.
2. Illuminatetheoneendoftheopticalfibrecablewithlaserlightandotherendtothe numerical aperture jig.
3. Hold the white screenwith four circles(10, 15,20 and 25mm diameter) verticallyat a suitable distance to make the red spot emitted from the optical fibre.
4. Record L, the distance of the screen from the fibre end and note the diameter (W) of the spot.

5. Computethe numerical aperture (NA)of theoptical fibreby using the formula

$$NA=\sin\theta_0=W/(4L^2+W^2)^{1/2},$$

Whereθ_0 iscalledasthe acceptanceangleisthemaximumangleofincidenceattheinput end of the optical fibre so that the optical ray can just propagate within the optical fibre.

6. Tabulate the reading and repeat the experiment for 15 mm, 20 mm and 25 mm diameter too.

7. In case the fibre is under filled, the intensity within the spot may not be evenly distributed. To ensure even the distribution of light within the optical fibre first remove the twists in the fibre cable.

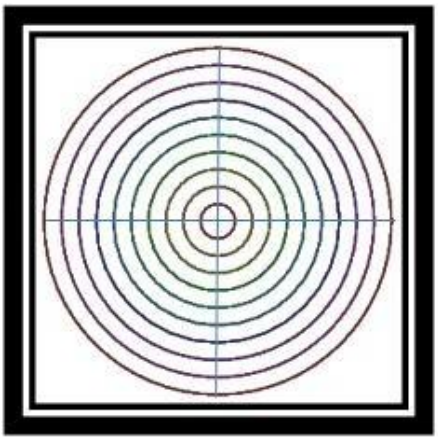

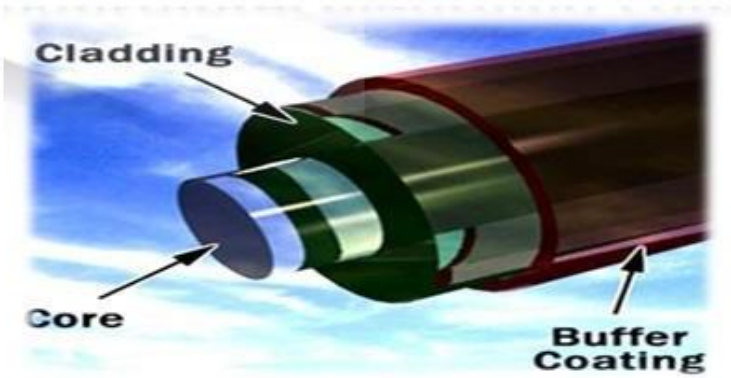

Figure:Numericalaperturejig whitescreenandinner viewofopticalfibre cable.

OBSERVATIONS:

Sr. No.	L (mm)	W(mm)	NA	θ_0
1.				
2.				
3.				
4.				

Computethenumericalaperturefromtheformula$NA=\sin\theta_0=W/(4L^2+W^2)^{1/2}$ And this

implies that acceptance angle $\theta_0= \sin^{-1}$ (NA).

RESULT:Theaveragevalueofthenumericalapertureofanopticalfibreis= The

value of acceptance angle = …… degrees.

Note: Theaveragevalueof numericalaperturefor

(i) Shortrangeoptical fibre should lie in therange 0.3 to 0.5.

(ii) Longrangeoptical fibreshould liein therange0.1 to 0.3.

PRECAUTIONS:

1. The optical fibre cable should be free from twists and folds so as to avoid the power loss.
2. Connectionsshouldbeproperandtight.

ORAL QUESTIONS:

1. Whatdoyoumeanbyrefractiveindex?
2. Whatisdifferencebetweenreflectionandrefraction?
3. Whatisthe basicprincipleof propagationoflight inanoptical fibre?
4. Whatarethe variousconditionsforTIRtotakeplace?
5. Definecriticalangle?
6. Thenumerical apertureof an opticalfibreshould liein therange
   (a) 0.1 to 1.0
   (b) 0.01 to 0.05
   (c) 0.1 to 0.5
   (d) 1 to 100
7. Numericalapertureis
   (a) sineofcriticalangle
   (b) cosofacceptance angle
   (c) sineofacceptanceangle
   (d) acceptancecone
8. Basicprincipleofpropagationofopticalsignalswithinthe opticalfibreis
   (a) Snell'slaw
   (b) Lawsof reflection
   (c) Totalinternal reflection
   (d) Lightpropagationprinciple
9. Name the various optical sources which we prefer for optical fibre communication.

EXPERIMENT8

OBJECTIVE:

Study the variation of magnetic field with distance along axis of a circular coil carrying current.

APPARATUSPROCEDURE:

A Stewart and Gee type tangent galvanometer, a strong battery, a rheostat, an ammeter,plug key, a commutator and connecting wires.

THEORY:

Theintensityofmagneticfieldatapointlyingontheaxisofacircularcoilisgivenby

$$B = \frac{2\pi n r^2 i \mu_0}{4\pi(x^2+r^2)^{3/2}}$$

Where, n =numberof turns in the coil

r=radius of thecoil

i=current inampere flowing inthecoil

=distanceof thepoint from thecenterof thecoil

IfthemagneticfieldBismadeperpendiculartothehorizontalcomponentofearth's magnetic field (H) then B = H tanθ or B $\propto$tanθ

Hencethegraphbetween tanθ andx will besimilar tothegraph betweenB and x.

DESCRIPTIONOF APPARATUS:

The apparatus used to study the variation of magnetic field with distance along the axis of a circular coil is called and Gee type tangent galvanometer as shown in figure (1). It consists of a circular coil of many thin insulated copper wires would wound on a wooden or brass frame. It is

fixed on a wooden bench AB with its plane vertical to the bench. The free ends of the wire are connected to two terminals T_1 and T_2fittedon the base. A deflection magnetometercompass box is placed inside the coil such that it can slide on the pillars of the bench in such a way that the center of the needle always lies on the axis of tube coil. The distance of the needle from the center of the coil can be read on the graduated scale on the arms of the magnetometer.

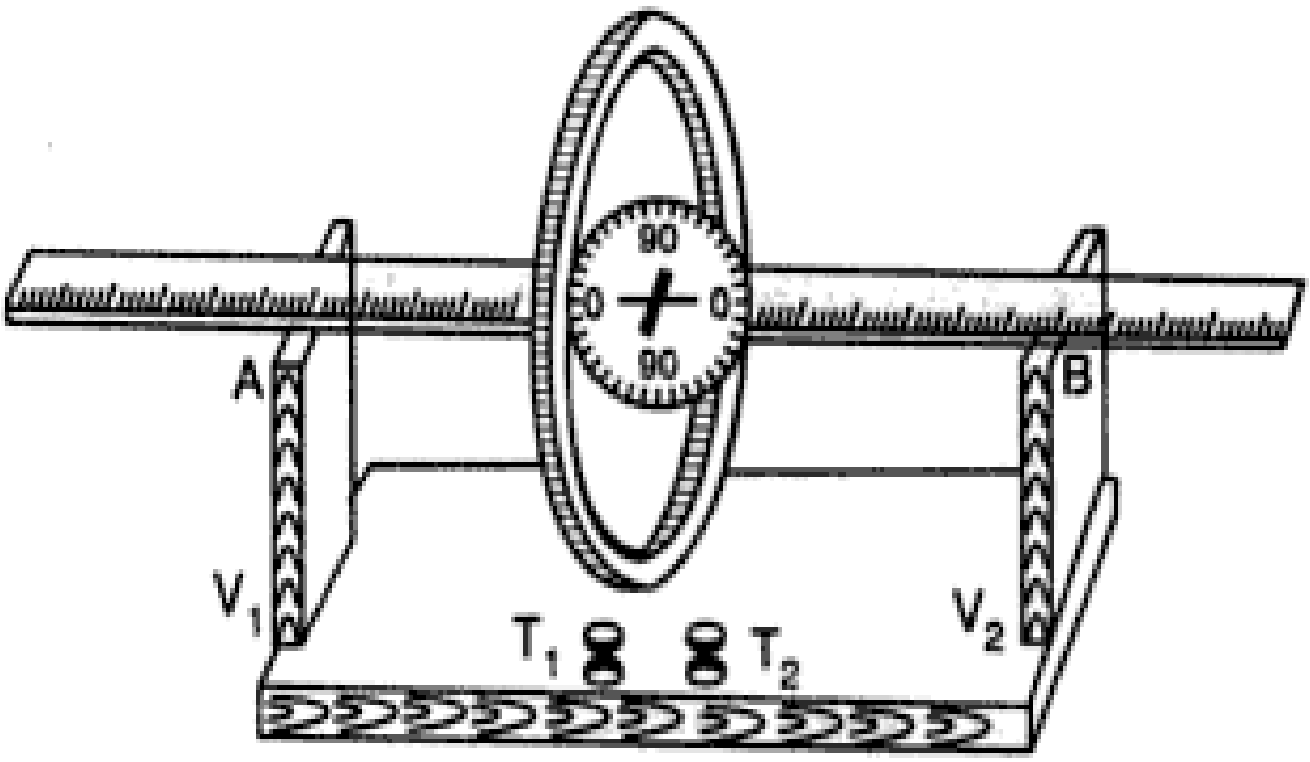

Fig. (1)

PROCEDURE:

1) Place the magnetometer compass box on the sliding bench so that its magnetic needle isat the center of the coil. By rotating the whole apparatus in the horizontal plane, set the coil in the magnetic meridian and the arms of the magnetometer lie east and westroughly. In this case the coil, needle and its image all lies in the same vertical plane. Rotate the compass box till the pointer ends read 0-0 on the circular scale.

2) In order to set the coil exactly in the magnetic meridian set up the electrical connections such that the galvanometer is connected to battery through rheostat, an ammeter, a plug key and a commutator as in the figure (2).
3) Send the current in one direction with the help of commutator and adjust the current such that the deflection of nearly $70^0$to 75^0 is produced in the compass needle. Now Reverse the direction of the current and note down the deflection of the needle. If the deflections are equal then the coil is in magnetic meridian otherwise turn the apparatus a little, adjust pointer ends to read 0-0 till these deflections become equal.
4) Now pass the current in the coil and slide the magnetometer along the axis of coil. Find out the position where the deflection becomes maximum.Note the readings of both the ends of the pointer. Reverse the direction of the current and again read both the ends of the pointer. The mean of four readings will give the mean deflection at x = 0.
5) Now shift the compass needle in the steps of 2cm along the axis of the coil and for each position note down the mean deflection. Continue this process till the compass box reaches the end of the bench.
6) Repeatthemeasurementsexactlyin thesamemanner ontheeithersideofthecoil.
7) Plot a graph between distance from center of coil x taking along the X-axis and tanθ (mean deflection) along the Y-axis.

OBSERVATIONS:

S. No.	Distance from centre x(cm)	Deflectiononeast arm				Meanθ= $\frac{\theta_1+\theta_2+\theta_3+\theta_4}{4}$ (in deg.)	tan θ	Deflectiononwest arm				Meanθ= $\frac{\theta_1+\theta_2+\theta_3+\theta_4}{4}$ (in deg.)	tanθ
		Current in one direction		Currentin reversed direction				Current in one direction		Current in reversed direction			
		θ_1	θ_2	θ_3	θ_4			θ_1	θ_2	θ_3	θ_4		

1.	0cm												
2.	5cm												
3.	10cm												
4.	15cm												
5.	20cm												
6.	25cm												
7.	30cm												
8.	35cm												

Graph: The variation of the intensity of magnetic field along the axis of a circular coil is shown in Fig. (3).

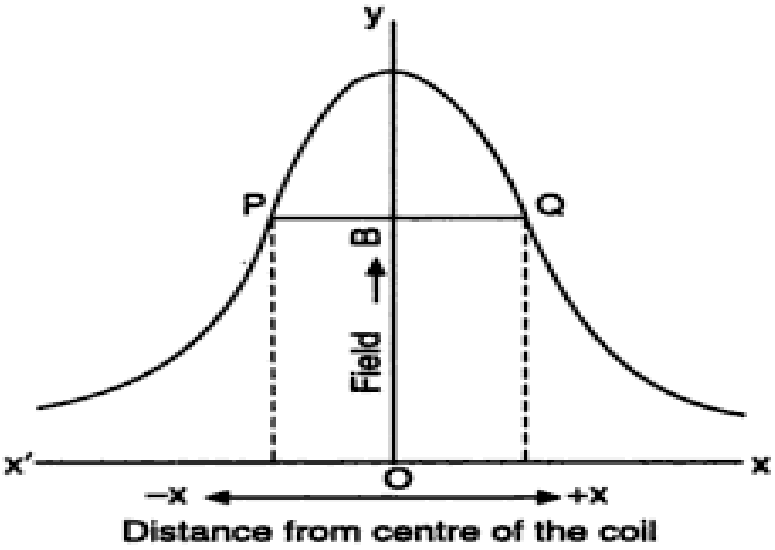

Fig. (3)

RESULT

Thegraphshowsthevariationofthemagneticfieldalongtheaxisofacircularcoil carrying current.

PRECAUTIONSANDSOURCESOF ERROR

1) Thecoilshould becarefullyadjusted inthemagneticmeridian.
2) All the magnetic materials and currentcarryingconductors should be ata considerabledistances from the apparatus.
3) Thecurrentpassedinthecoilshouldbeofsuchavalueastoproduceadeflectionof nearly 70^0-75^0.
4) Current should be checked from time to time and for this purpose am ammeter should be connected in series with the battery.
5) Theeyeshould bekept vertically abovethepointer to avoid any errordueto parallax.
6) Thecurveshould bedrawn smoothly.

ORAL QUESTIONS

1. Whatis the useof compass box?
2. Whatdoyou meanbymagneticfield?
3. Explainthevariationofthemagneticfieldalongtheaxisofacircularcoilcarrying current.

EXPERIMENT9

Objective:DeterminationofPlanck'sconstant.

Apparatus: 0-10 Vpower supply, a one way key, a rheostat, a digital milliammeter, a digital voltmeter, a 1 K resistor and different known wavelength LED's (Light-Emitting Diodes).

Theory:Planck's constant (h), a physical constant was introduced by German physicist named Max Planck in 1900. The significance of Planck's constant is that 'quanta' (small packets of energy) can be determined by frequency of radiation and Planck's constant. It describes the behavior of particle and waves at atomic level as well as the particle nature of light.

An LED is a two terminal semiconductor light source. In the unbiased condition a potential barrier is developed across the p-n junction of the LED. When we connect the LED to anexternal voltage in the forward biased direction, the height of potential barrier across the p-n junction is reduced. At a particular voltage the height of potential barrier becomes very low and the LED starts glowing, i.e., in the forward biased condition electrons crossing the junction are excited, and when they return to their normal state, energy is emitted.

This particular voltage is called the **knee voltage** or the **threshold voltage**. Once the knee voltage is reached, the current may increase but the voltage does not change.

Thelightenergyemittedduringforwardbiasingisgivenas,

$$E = \frac{hc}{\lambda} \qquad (1)$$

Where

c -velocity of
light.h-
Planck'sconstant.
λ-wavelengthof light.

IfVistheforwardvoltageappliedacrosstheLEDwhenitbeginstoemitlight(theknee voltage), the energy given to electrons crossing the junction is,

$$E = eV \tag{2}$$

Equating(1)and(2),we get

$$eV = \frac{hc}{\lambda} \tag{3}$$

ThekneevoltageVcanbemeasured forLED'swith differentvaluesof λ(wavelengthof light).

$$V = \frac{hc}{e}\left(\frac{1}{\lambda}\right) \tag{4}$$

Nowfromequation(4),weseethattheslopesofagraphofVontheverticalaxisvs.1/λonthe horizontal axis is

$$s = \frac{hc}{e} \tag{5}$$

TodeterminePlanck'sconstanth,wetaketheslopesfromour graphandcalculate

$$h = \frac{e}{c}s$$

usingthe known value

$$\frac{e}{c} = 5.33 \ x \ 10^{-28}\frac{Cs}{m}$$

Alternatively,we canwriteequation(3) as

$$h = \frac{e}{c}\lambda V$$

calculateh foreachLED, andtakethe averageof our results.

Procedurefor Simulation

Placethemousepointer overthecomponentsandclicktodrag wire.

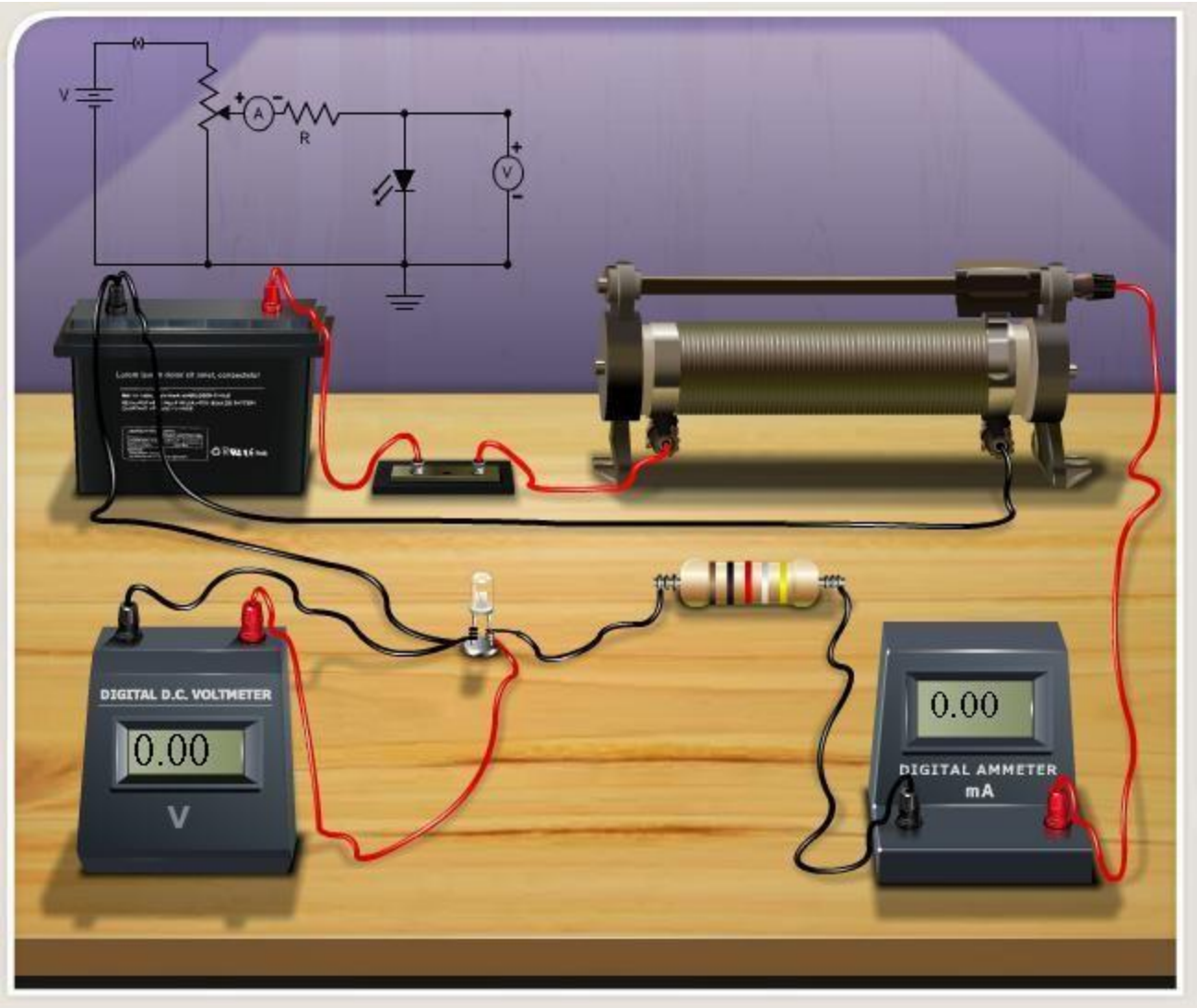

1. Aftertheconnectionsarecompleted,clickon‘InsertKey’button.
2. Clickon thecombo box under‘Select LED’ button.
3. Clickonthe‘RheostatValue’toadjustthevalue of rheostat.
4. CorrespondingvoltageacrosstheLEDismeasuredusingavoltmeter,whichistheknee voltage.
5. Repeat,bychangingthe LEDandnotedownthe correspondingkneevoltage.

6. Calculate‘h’usingequation $h = \frac{e\lambda V}{c}$
7. Thewavelength ofinfrared LEDiscalculated byusing equation, $\lambda = \frac{hc}{eV}$

Observations

COLOR OF LED	WAVELENGHTH OF LED COLOR	KNEEVOLTAGE THROUGH GRAPH	PLANK’SCONSTANT
RED	**610 NM**		
GREEN	**575 NM**		
BLUE	**470 NM**		

ProcedureforReallab

Connectionsaremadeasshownincircuit diagram

1. Insertkeytostartthe experiment.
2. Adjust the rheostat value till the LED starts glowing, or in the case of the IR diode, whoselightisnotvisible,untiltheammeterindicatesthatcurrenthasbeguntoincrease.
3. CorrespondingvoltageacrosstheLEDismeasuredusingavoltmeter,whichistheknee voltage.
4. Repeat,bychangingthe LEDandnotedownthe correspondingkneevoltage.
5. Usingtheformulagiven,findthe value ofthe Planck's constant.

Results

Planck’sconstant = Js.

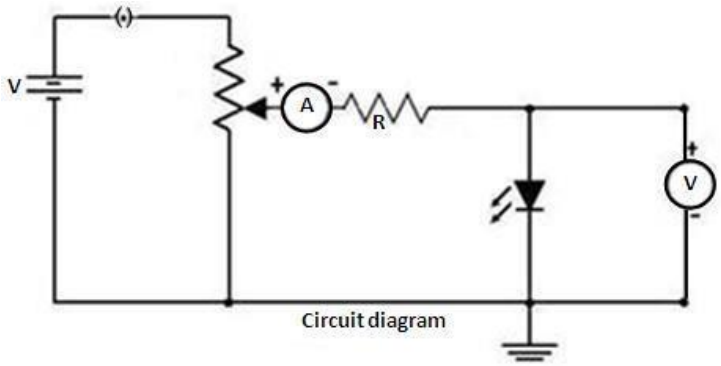

Oral Questions:

1. Whatis the valueofkneevoltageforaYellowLEDlight?

2. Calculatethevalueof Planck'sconstantforblueLED, foritskneevoltage.

3. CalculatethewavelengthofIRLEDbycomparingwithRedLEDattheircorrespondingknee voltage.

4. CalculatethevalueofIRLEDbycomparingwithGreenLEDattheircorrespondingknee voltage.

5. CalculatethewavelengthofIR LEDbydrawingagraphbetweenvoltageand wavelength.

6. WhathappenswhenanLEDisdirectlyconnectedtoapowersupply?Whichisthemost suitable value of resistor if a power supply of 0-12 V is used

7. WhichLEDhas thelargestenergy gap?

EXPERIMENT10

Objective:TodeterminetheHallvoltagedevelopedacrossthesamplematerial.To calculate the Hall coefficient and the carrier concentration of the sample material.

Theory:

If a current carrying conductor placed in a perpendicular magnetic field, a potential difference will generate in the conductor which is perpendicular to both magnetic field and current. This phenomenon is called Hall Effect. In solid state physics, Hall effect is an important tool to characterize the materials especially semiconductors. It directly determines both the sign and density of charge carriers in a given sample.Consider a rectangular conductor of thickness *t* kept inXYplane.Anelectric fieldisappliedinX-directionusingConstantCurrentGenerator(CCG), so that current *I* flow through the sample. If *w* is the width of the sample and *t* is the thickness. There for current density is given by

$$J_x = I/wt \qquad (1)$$

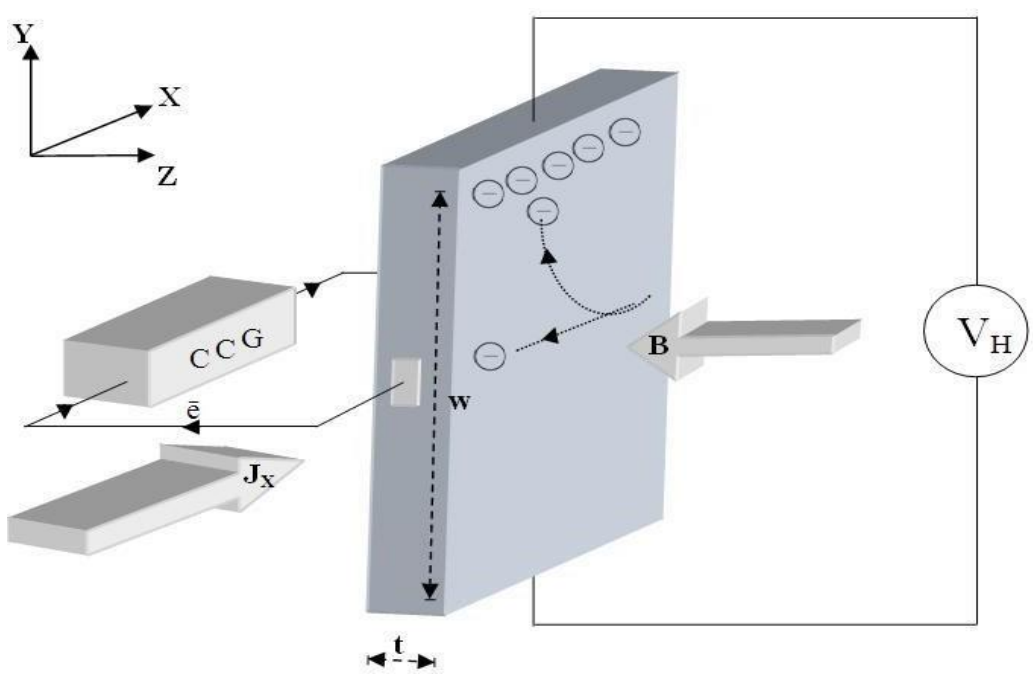

Fig.1 SchematicrepresentationofHallEffectina conductor.

CCG–ConstantCurrentGenerator, J_X –currentdensity

$\bar{e}$–electron,***B***–applied magneticfield

t– thickness,***w***– width

V_H–Hall voltage

Ifthemagneticfieldisappliedalongnegativez-axis,theLorentzforcemovesthechargecarriers (say electrons) toward the y-direction. This results in accumulation of charge carriers at the top edge of the sample. This set up a transverse electric field $\mathbf{E_y}$in the sample. This develop a potentialdifference alongy-axisisknownasHallvoltage$V_H$andthiseffectiscalledHallEffect.

Acurrentismadetoflowthroughthesamplematerialandthevoltagedifferencebetweenitstop and bottom is measured using a volt-meter. When the applied magnetic field B=0,the voltage difference will be zero.

We know that a current flows in response to an applied electric field with its direction as conventionalanditiseitherduetotheflowofholesinthedirectionofcurrentorthemovement of electrons backward. In both cases, under the application of magnetic field the magnetic Lorentz force, $F_m = q(vxB)$ causes the carriers to curve upwards. Since the charges cannot escapefromthematerial,averticalchargeimbalancebuildsup.Thischargeimbalanceproduces an electric field which counteracts with the magnetic force and a steady state is established. The vertical electric field can be measured as a transverse voltage difference using a voltmeter.

Insteadystatecondition,themagneticforceisbalancedbytheelectricforce.Mathematicallywe can express it as

$$eE = evB \qquad (2)$$

Where'e'theelectriccharge,'E'thehallelectricfielddeveloped,'B'theappliedmagneticfield and 'v' is the drift velocity of charge carriers.

Andthecurrent'I'canbe expressed as,

$$I = neAv \tag{3}$$

Where'n'isthenumberdensityofelectronsintheconductoroflengthl,breadth'w'and thickness 't'.

Using(1)and (2)theHall voltage$V_H$can bewritten as,

$$V_H = Ew = vBw = \frac{IB}{net}$$

$$V_H = R_H \frac{IB}{t} \tag{4}$$

byrearranging eq(4)weget

$$R_H = \frac{V_H * t}{I * B} \tag{5}$$

Where$R_H$iscalledthe Hall coefficient.

$$R_H = 1/ne \tag{6}$$

Procedure:

- Connect‘Constantcurrentsource’tothe solenoids.
- Fourprobeisconnected totheGauss meterandplacedatthemiddle ofthe two solenoids.
- SwitchONtheGauss meterandConstantcurrentsource.

- Varythecurrentthroughthesolenoidfrom1Ato5Awiththeintervalof0.5A,andnote the corresponding Gauss meter readings.
- SwitchOFFtheGaussmeterandconstantcurrentsourceandturntheknobofconstant current source towards minimum current.
- FixtheHallprobeonawoodenstand.ConnectgreenwirestoConstantCurrent Generator and connect red wires to milli voltmeter in the Hall Effect apparatus
- ReplacetheFourprobewithHallprobeandplacethesamplematerialatthemiddleof the two solenoids.
- SwitchONtheconstantcurrentsourceand CCG.
- CarefullyincreasethecurrentIfromCCGandmeasurethe correspondingHallvoltage $\boldsymbol{V_H}$.Repeatthisstepfordifferentmagneticfield$\boldsymbol{B}$.
- Thickness$\boldsymbol{t}$ofthesample ismeasuredusingscrewgauge.
- HencecalculatetheHall coefficient$\boldsymbol{R_H}$usingtheequation5.
- Thencalculatethecarrier concentration$\boldsymbol{n}$.usingequation6.

SpecificationofHallProbe:-(p-type)semiconductor probe

Thickness(t) ofsemiconductorprobe=0.05cm

Result

Hallcoefficientofthematerial = ... $15.8X10^{3(}$cm/c)

Carrierconcentrationofthe material = ... cm^{-3}(~10^{14})